8JRVLSNSN

Specifications

SINGLE CONTROL KITCHEN SET WITH RETRACTABLE DUAL HAND SPRAY

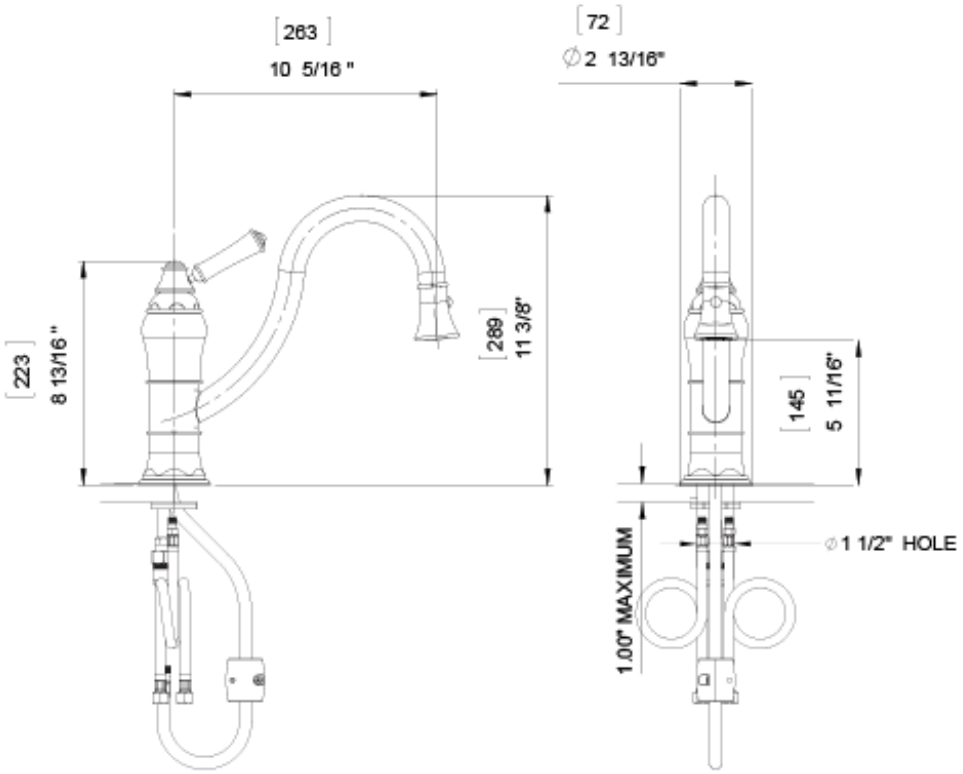

Critical Dimensions

Tel: 905-851-6780
Fax: 905-851-8031
Toll Free: 800-461-5901