PFISTER

Deckard™

Single Control Roman Tub

RT6-2DAB Finish*(B)* ❑
RT6-2DAC Finish*(C)* ❑
RT6-2DAK Finish*(K)* ❑

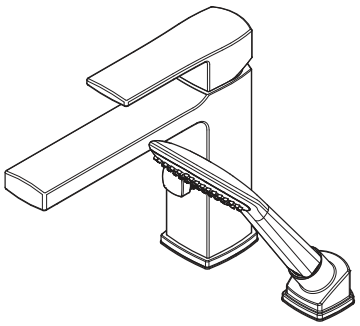

Specifications

Features

- 1.8 GPM Flow Rate (Handheld)
- 2-Hole Installation
- No Additional Valve Required
- Pforever Seal Ceramic Disc Valve
- Pforever Warranty®

Code Compliance

Pfister products are designed and manufactured in compliance with the following standards and codes:

- IAPMO Certified
- CSA B125 Certified
- ASME A112.18.1
- CEC Compliant
- ADA Compliant-ANSI A117.1 (Lever handles only)
- ASME A112.18.3 (Backflow Prevention)
- EPA WaterSense Certification 1.8 gpm, 6.8 L/Min

Dimensions

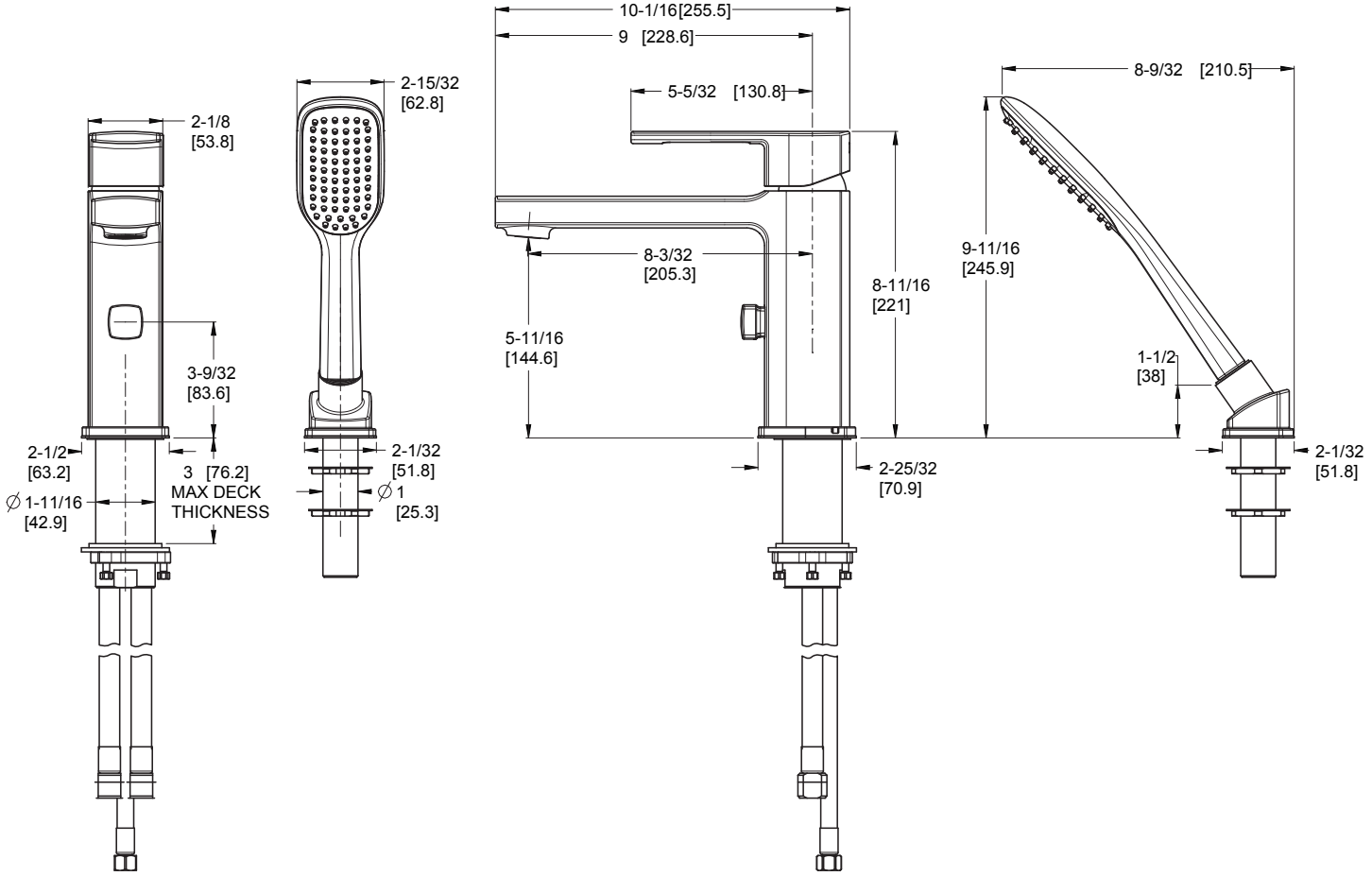

Ø1-3/4 Min to Ø2 Max. Deck Hole Openings

Copyright © 2018, Pfister Inc.